291 REVERSE DIAL INDICATOR

Jeweled

Shock proof

- Shockproof
- Graduation: 0.01mm
- Reverse reading
- With limit hands
- Jeweled bearing
- Rang per revolution: 1mm
- Supplied with lug and flat back

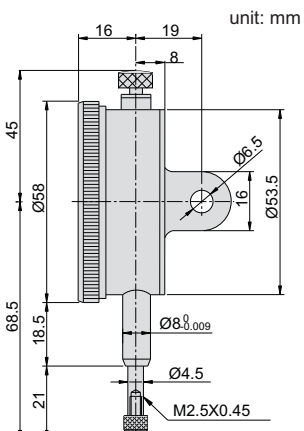

Styli(optional)

Application

Code	Range	Accuracy	Hysteresis	Scale
291-010-I	10mm	17μm	3μm	0-100