176 VERNIER DEPTH CALIPER

- Measure the depth of grooves, small holes and tire thread
- Graduation: 0.1mm
- Made of stainless steel

Set zero

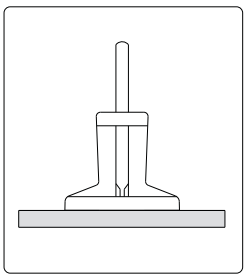

Measure

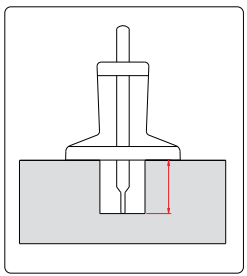

unit: mm

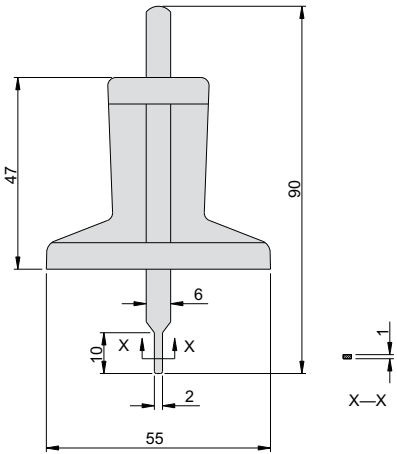

Code	Range	Accuracy
176-030-12	0-30mm	±0.10mm