809 MOVABLE WORKBENCH

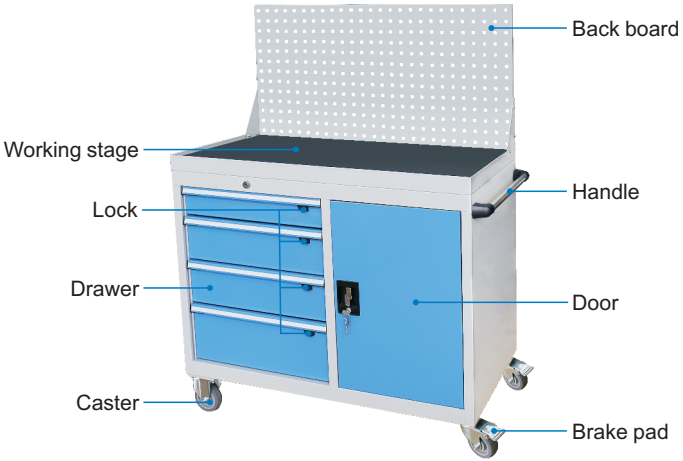

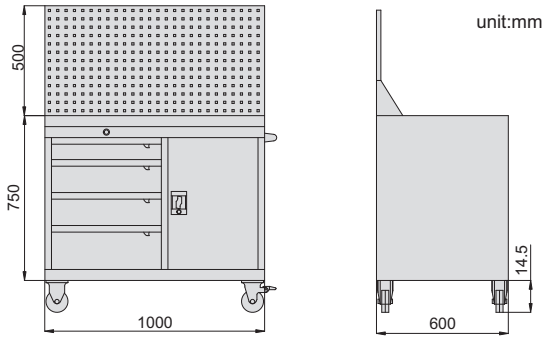

Application

Code	Description	LxWxH
809-040-11	movable workbench	1000x600x1250